PRODUCT SHEET

Description:
Invis. Full Ext. Slide, Self Closing, Pre-Zinc,250mm,W/Quick Release & Inner Dampers

Item number:
16.13.470-0

Units	Box	Carton	HS Code	Barcode
Pair	1	10	8302420090	5704866001021

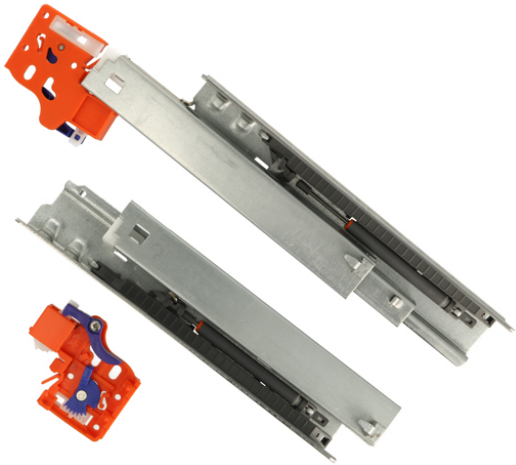

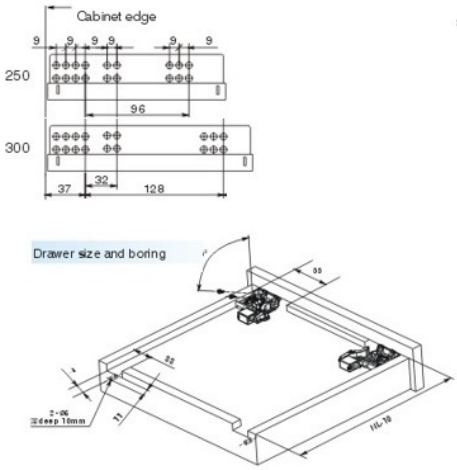

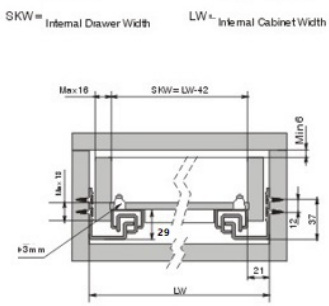

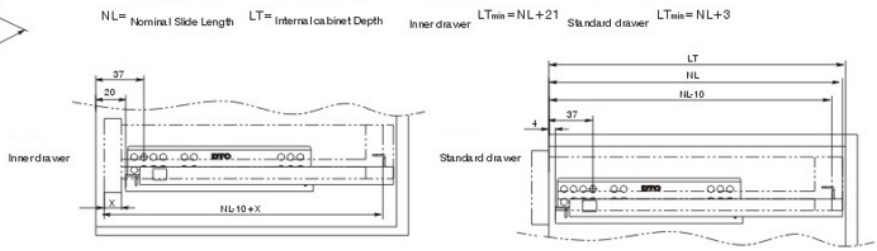

SISO A/S
Mileparken 11
DK-2740 Skovlunde
Denmark
VAT: DK 24786013

Phone +45 45 830 900

www.siso.dk
siso@siso.dk

Danske Bank
Nytorv Branch
Copenhagen
SWIFT: DABADKKK

Account no.
4180 3112 112936
IBAN Account
DK7230003112112936